Purchase Date:____/____/____ Order/Customer Reference Number:_____

Replacement parts or products can be requested within the 1-year warranty period. Proof of purchase must be provided.

For additional warranty information, visit sunnydazedecor.com/pages/sunnydaze-decor-warranty

If you have any questions, comments or concerns, contact us at **833-982-1977**, or customerservice@sunnydazedecor.com

# SLAT-BACK BANANA BENCH

## LAX-5191

Review all assembly and care information before using this product. Save this manual for future reference.

**Assemble components on a soft, clean surface to avoid damaging the finish.**

**Inspect packaging to ensure all parts are accounted for before disposing of packing materials.**

**SCAN THIS CODE WITH YOUR SMARTPHONE TO VIEW OUR ASSEMBLY VIDEO**

**700 pounds**
**317 kg**
Weight Capacity

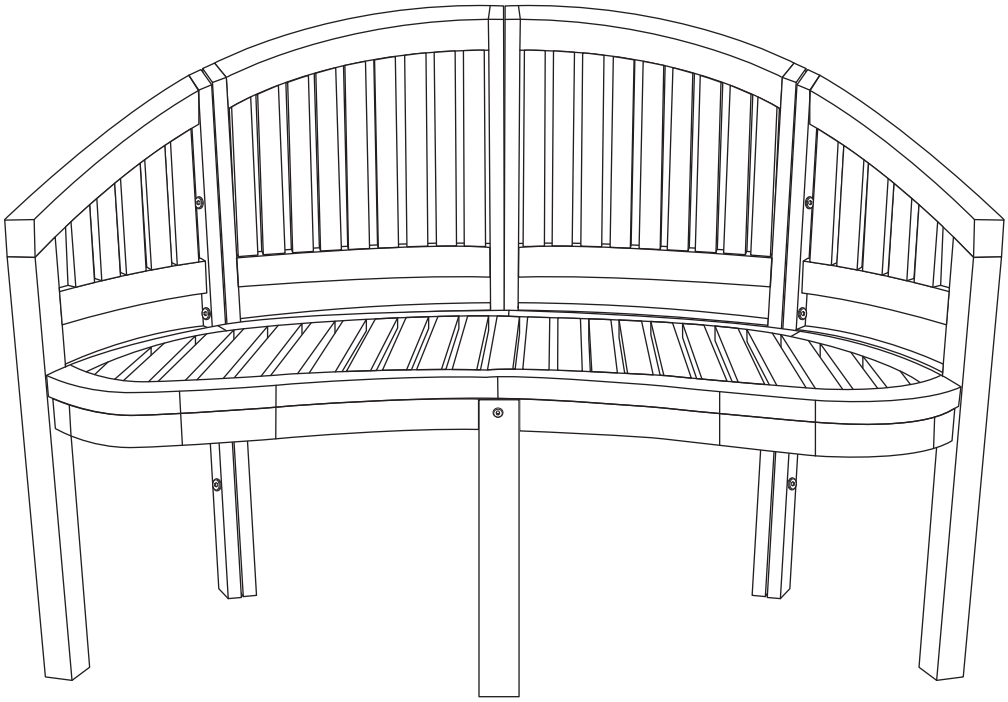

| No. | Parts | | Qty. |
|---|---|---|---|
| A | 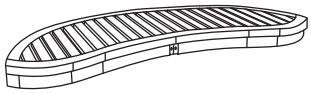 | Seat | 1 |
| B | 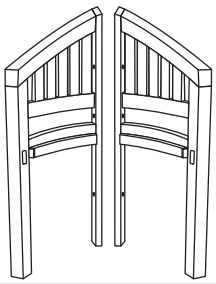 | Outside Backrest (L/R) | 2 |
| C | 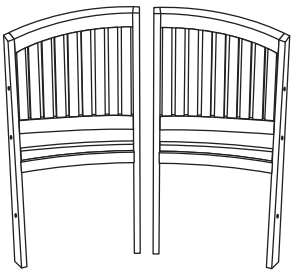 | Inside Backrest (L/R) | 2 |
| D | | Leg | 1 |

| No. | Hardware | | Qty. |
|---|---|---|---|
| E | | M6x50mm Bolt | 3 |
| F | 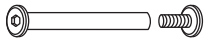 | M6x50mm Chicago Bolt Set | 9 |
| G | | M6x30mm Screw | 8 |
| H | | Rubber Foot | 9 |
| I | | M6x15mm Screw | 9 |

| Included Tools | |
|---|---|
| | Hex Key |

**NOTE:** Save the included tool. Wood expands and contracts with changes in temperature and moisture, which may require hardware to be tightened.

| Tools Required (not included) | |
|---|---|
| | Phillips Screwdriver |

## ⚠ WARNING ⚠

**CHOKING HAZARD —** This item contains small parts that can be swallowed. Keep children and pets away during assembly.

# ASSEMBLY

## STEP 1

**A:** 1

**D:** 1

**E:** 1

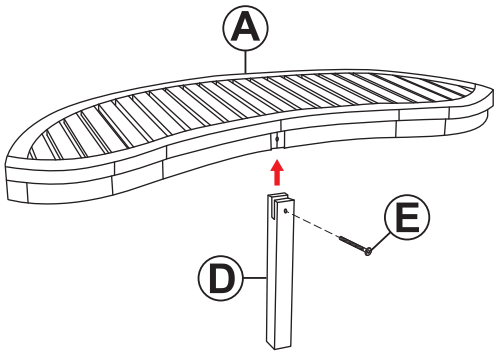


Secure Leg (D) to the front of Seat (A) using one M6x50mm Bolt (E).

## STEP 2

**B:** 2

**C:** 2

**F:** 6

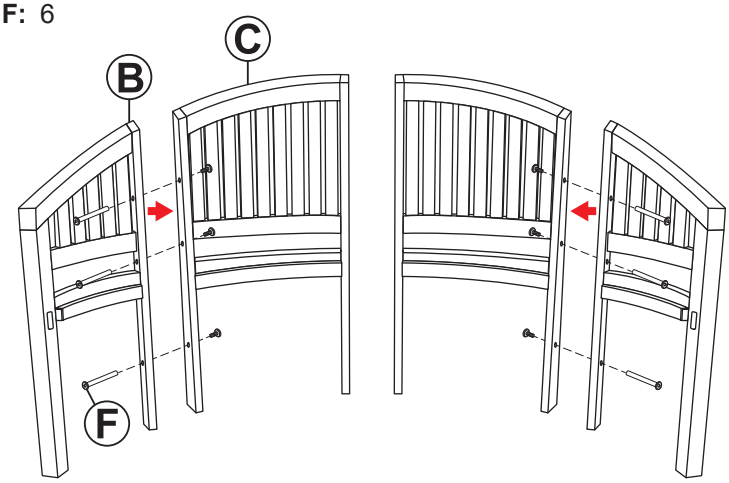


Loosely secure the right Outside Backrest (B) to the right Inside Backrest (C) using three M6x50mm Chicago Bolt Sets (F).

Repeat this step to connect the left Backrests.

## STEP 3

**E:** 1

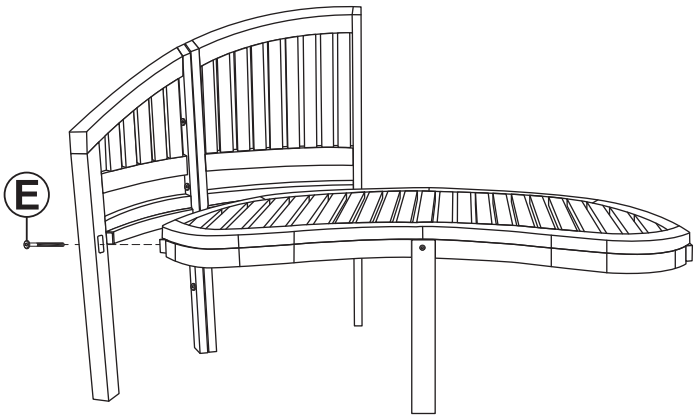


Loosely secure the seat to the right backrests using one M6x50mm Bolt (E).

## STEP 4

**E:** 1

**F:** 3

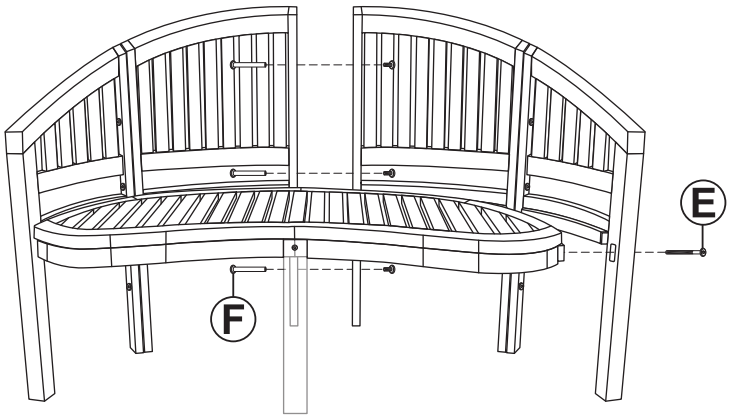


Loosely secure the left backrests to the seat using one M6x50mm Bolt (E). Then firmly secure the inside backrests using three M6x50mm Chicago Bolt Sets (F). Finish tightening all hardware.

# ASSEMBLY

## STEP 5

**G:** 8

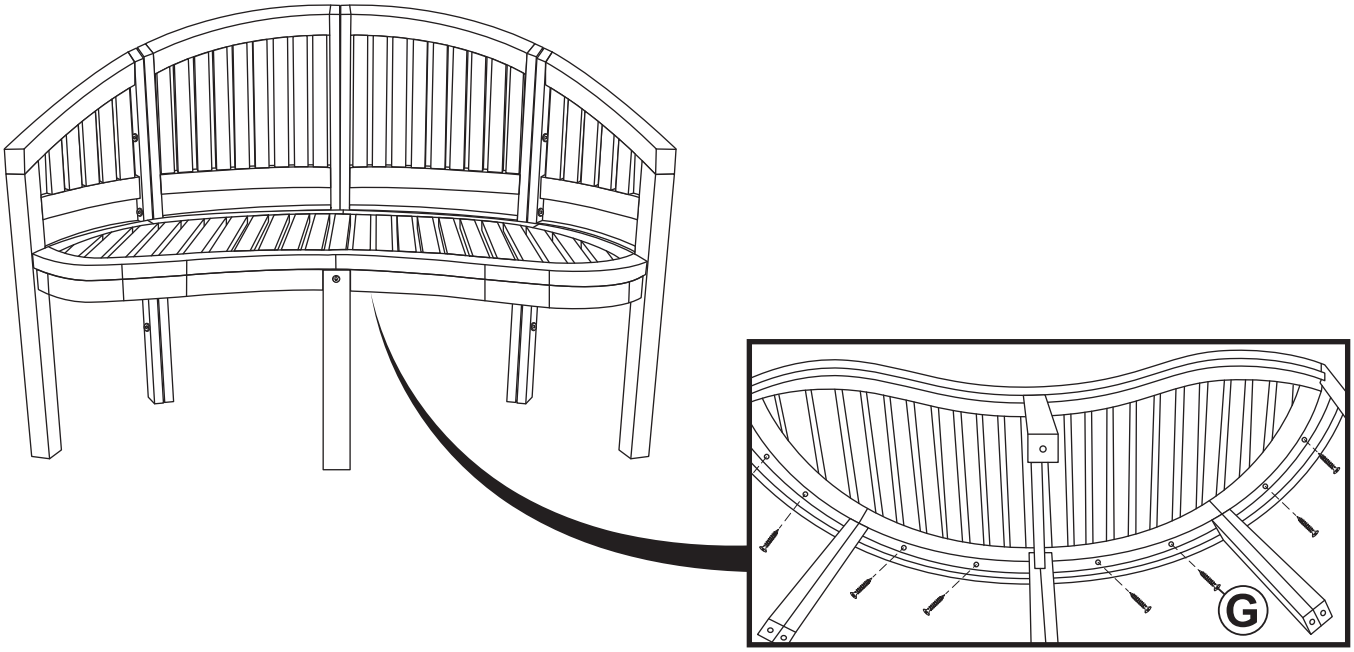


On the underside of the unit, secure the seat to the backrests using eight M6x30mm Screws (G).

## STEP 6

**H:** 9

I: 9

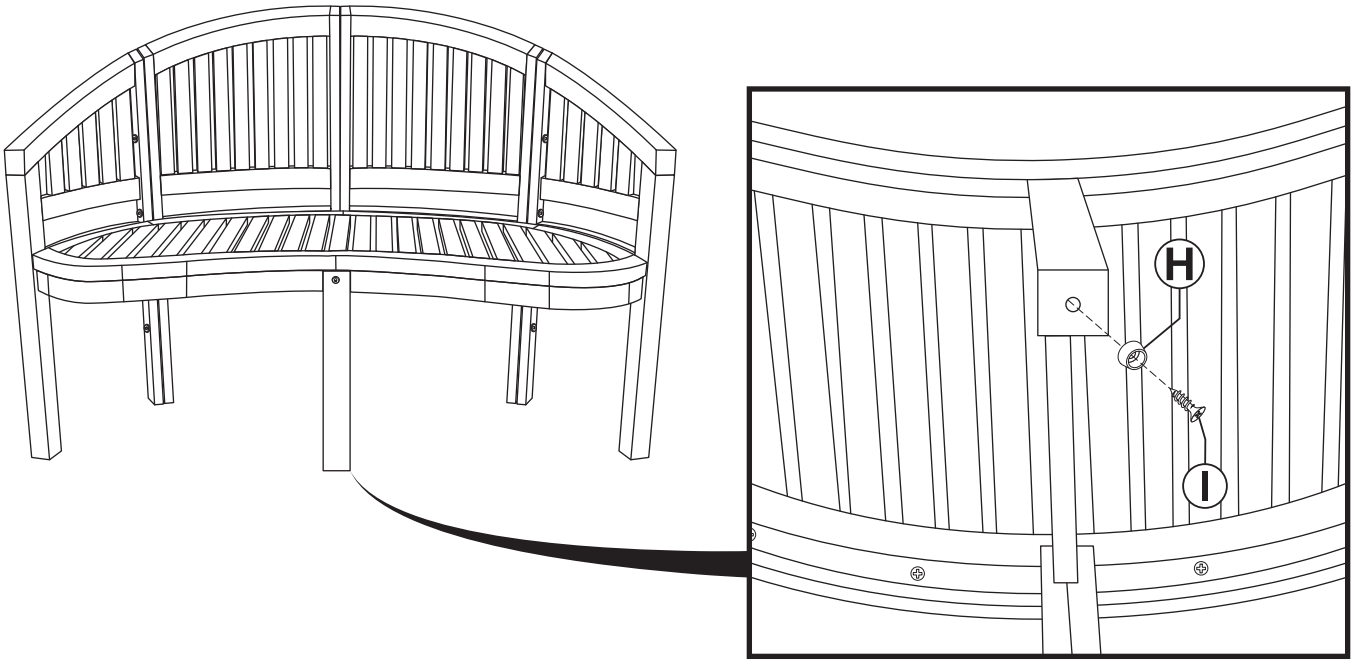


On the underside of the legs, secure one Rubber Foot (H) to a leg with one M6x15mm Screw (I) into the pilot hole. Repeat for the other two front legs. For the three back legs, secure two rubber feet with two M6x15mm screws per leg.

# Care & Maintenance

**SAFE USE:** Use on a flat, level surface. Do not exceed the weight capacity. Do not stand or climb on the unit.

**EXPOSURE:** Over time, sunlight and weather elements will cause the wood to oxidize, turning it to a silvery gray color. Additionally, long-term exposure to sun, rain, and high humidity may cause wood swelling. Stress caused from swelling can lead to splitting or cracking, cause hardware to loosen, and glued joints to fail. Maintenance is required to keep teak furniture in tip-top condition.

**INSPECT:** Periodically check assembly points and tighten fittings as necessary.

**CLEANING:** Identify the direction of the woodgrain. Following the direction of the woodgrain, wipe surfaces with a soft, dry cloth. Do not use harsh chemicals, abrasive materials, or a pressure washer to clean the unit.

**CARE & STORAGE:** Protect this item from inclement weather, especially ice and snow. Move to a dry indoor location when not in use. Covering while in storage is recommended to help prevent dust build-up.

**MAINTENANCE:** If left untreated, the wood may weather. To maintain the appearance, apply a suitable penetrating wood oil (not included) at least once per year or when the wood looks particularly dry.

Before applying a suitable wood oil, clean the unit and bring it into a dry, warm, indoor location. Allow the unit to dry thoroughly before applying oil; drying may take several days. Only apply oil to wooden surfaces. Apply oil as directed by the wood oil manufacturer.

**WARNING: THE ONE-YEAR WARRANTY DOES NOT COVER DAMAGES OR DEFECTS CAUSED BY THE APPLICATION OF CHEMICAL TREATMENTS, PROTECTIVE COATINGS, OR CLEANING PRODUCTS.**

## ⚠ SAFETY STATEMENTS & WARNINGS ⚠

- Do not put hot items on or near furniture.
- Do not use this item in the proximity of open flame or flammable/combustible chemicals.
- Keep this unit a safe distance from heat sources such as fire pits, patio heaters, and grills.
- Do not use harsh chemicals or abrasive materials to clean this unit.
- This product is for residential use only; institutional or commercial use will void this warranty.

**Any modification to the product or failure to follow recommended care will void the product warranty.**

*If you experience issues with assembly or the product was damaged during shipping, please contact our customer service team through one of the methods mentioned at the top of page 1. Please have the item number and order information ready to expedite response time.*

## ⚠ WARNING:

**Manufacturer and seller expressly disclaim any and all liability from personal injury, property damage or loss, whether direct or indirect, or incidental, resulting from the incorrect attachment, improper use, inadequate maintenance, or neglect of this product.**